SERIES XTR FITTINGS

The XTR fittings feature the use of high resistant materials in terms of both chemical compatibility and temperature range.
As automatic fittings, they can be reused countless times without affecting their perfect pneumatic and mechanical tightness.
The specially designed clamping spring holds the tube in place without marking or deforming it.
What's more, the choice of suitable materials and the performance of specific release tests make the XTR range of fittings ideal for use in the food industry and in contact with water; the gaskets are made of special FDA-approved EPDM Perox.
The threads are round in shape in order to ensure pneumatic sealing, which is guaranteed by an O-ring underside. This solution eliminates the need for sealants (such as Teflon® or similar) which, during screwing and unscrewing, could release solid fragments, thus polluting the environment and the fluid. XTR fittings, on the other hand, can be screwed and unscrewed repeatedly as desired, thereby guaranteeing pneumatic sealing and cleanliness at all times.
For applications requiring materials suitable for high temperatures, but without the need for food compliance, the XTR FKM range is available.



TECHNICAL DATA		STEEL	TECHNOPOLYMER
Threaded port		G (BSP)*: 1/8 - 1/4	
Diameter	mm	Ø 6 - Ø 8	
Temperature range	°C	– 20 to 150	See temperature/pressure diagram
	°F	– 4 to 302	
Pressure range	bar	– 0.99 to 16	See temperature/pressure diagram
	MPa	– 0.099 to 1.6	
Recommended pipe		Rilsan PA 11 - Nylon 6 - Polyamide 12 - Polypropylene	
		PTFE for temperatures over 60°C	
Fluid		Vacuum - Compressed air	
Compatibility of oils and substances		See **chapter Z1**	

* Cylindrical threads according to ISO 228-1, identified with a letter G. They also correspond to BSP or more precisely to BSPP designation (P stands for Parallel).

COMPONENTS

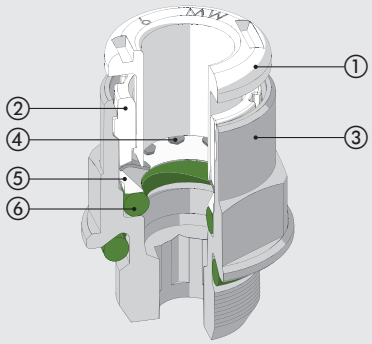

① Release bushing: PPSU
② Locking bushing: PPSU
③ Body: AISI 316L steel
④ Clamping spring: stainless steel
⑤ Spring supporting ring: PPSU
⑥ Gasket:
- EPDM Perox (black) for XTR version
- FKM (green) for XTR FKM version

TEMPERATURE/PRESSURE DIAGRAM FOR TECHNOPOLYMER FITTINGS

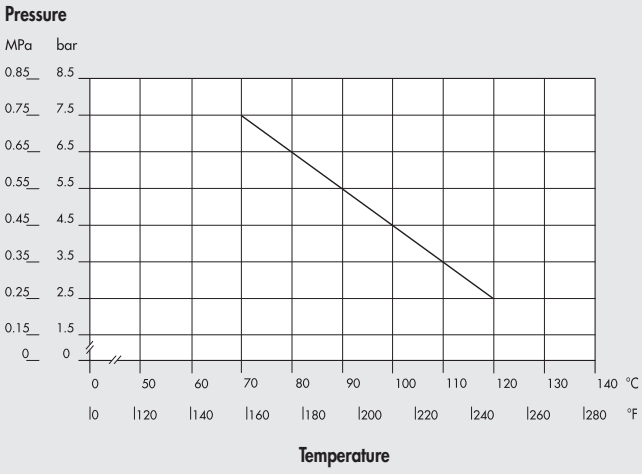

ADVANTAGES / CERTIFICATIONS

SERIES XTR

ADVANTAGES
Under-head O-ring
Can be screwed and unscrewed any number of times; no fragments of Teflon® or sealant will contaminate the fluid.

Corrosion resistance
The intermetallic alloy deposited on the surface and the EPDM are compatible with numerous substances.

CONFORMITY DECLARATIONS
- DM 174
- Regulation 1935/04 EU.*
- Regulation 2023/06 EU.

* For the product's conditions of use, please refer to the MOCA_XTR declaration of conformity available in the certifications section of the Metal Work website.

CERTIFIED
- NSF/ANSI 169 standard: products in contact with food.

NSF COMPONENT

SERIES XTR FKM

ADVANTAGES
Under-head O-ring
Can be screwed and unscrewed any number of times; no fragments of Teflon® or sealant will contaminate the fluid.

Corrosion resistance
The intermetallic alloy deposited on the surface and Viton® are compatible with numerous substances..

CONFORMITY DECLARATIONS
- DM 174

CERTIFIED
- NSF/ANSI 169 standard: products in contact with food.

NSF COMPONENT

INSTALLING THE PIPE

Compressed air pipes must be used in compliance with some basic criteria in order to ensure long life and proper operation of the fitting:
- check that the conditions for the installation and use (e.g. temperature and fluid used) comply with the characteristics stated by the pipe manufacturer;
- check the pipe size; oversized pipes could not fit properly, undersized ones could not ensure pipe retention and air tightness.

The cut should be as accurate as possible at a right angle with the pipe axis.

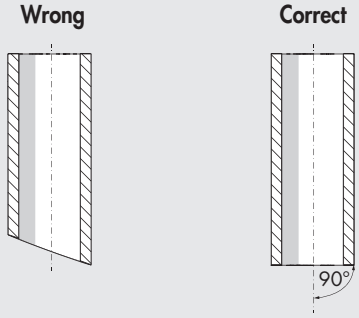

- the bending radius of the pipe installed must be as wide as possible. The fittings have been designed to ensure axial seal of the pipe; excessive curvature could considerably shorten the life of the pipe.
- the pipe must not be subjected to excessive axial stress and it must be of the right length for snugly fitting (not too long or too short).
- correct insertion of the pipe into the fitting is essential for air tightness and pipe retention. Make sure that the pipe is pushed right into the seat.
- check that the pipe does not encounter any obstacles or blockages along its way, which could cause tensile stress of the pipe in the fitting.

STRAIGHT, CYLINDRICAL, MALE R1 XTR



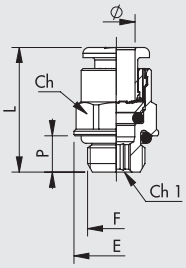

Code	Ø	F	Ch	Ch1	P	L	E
2_T0107	6	1/8	12	4	6	21.6	14
2_T0108	6	1/4	12	4	8	20.3	18
2_T0109	8	1/8	13	5	6	25.4	14
2_T0110	8	1/4	14	6	8	24.4	18

To complete the code, insert in second position:
X for **XTR** version, with **EPDM** gaskets
V for **XTR FKM** version, with **FKM** gaskets

STRAIGHT, FEMALE R2 XTR



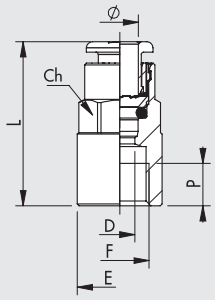

Code	Ø	F	Ch	P	L	D	E
2_T0205	6	1/8	12	7	27.1	5	14
2_T0206	6	1/4	12	8	29.3	5	17
2_T0207	8	1/8	13	7	28.1	7	14
2_T0208	8	1/4	14	8	30	7	17

To complete the code, insert in second position:
X for **XTR** version, with **EPDM** gaskets
V for **XTR FKM** version, with **FKM** gaskets

REDUCER R8 XTR



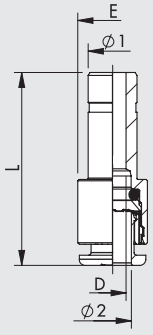

Code	Ø1	Ø2	L	D	E
2_T0806	8	6	31.9	4.5	11.5

To complete the code, insert in second position:
X for **XTR** version, with **EPDM** gaskets
V for **XTR FKM** version, with **FKM** gaskets

ELBOW, INTERMEDIATE, TECHNOPOLYMER R21 XTR



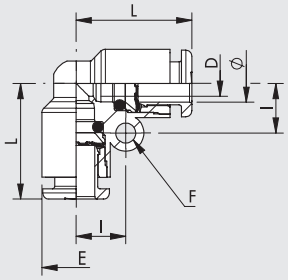

Code	Ø	L	D	E	I	F
2_T2103	6	19	4.2	11.3	8.2	3.3
2_T2104	8	21.4	6.2	13.8	9.6	3.3

To complete the code, insert in second position:
X for **XTR** version, with **EPDM** gaskets
V for **XTR FKM** version, with **FKM** gaskets

INTERMEDIATE TEE, TECHNOPOLYMER R22 XTR



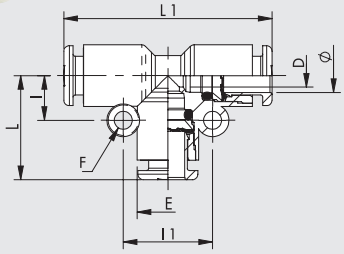

Code	Ø	L	L1	D	E	I	I1	F
2_T2203	6	19	38	4.2	11.3	8.2	16.4	3.3
2_T2204	8	21.4	42.8	6.2	13.8	9.6	19.2	3.3

To complete the code, insert in second position:
X for **XTR** version, with **EPDM** gaskets
V for **XTR FKM** version, with **FKM** gaskets

ROTARY ELBOW, MALE, TECHNOPOLYMER R34 XTR



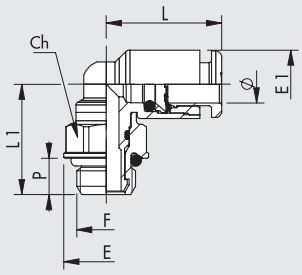

Code	Ø	F	Ch	P	L	L1	E	E1
2_T3407	6	1/8	12	6	19	18.3	14	11.3
2_T3408	6	1/4	14	8	19	21.2	18	11.3
2_T3409	8	1/8	12	6	20.2	19.5	14	13.8
2_T3410	8	1/4	14	8	20.2	22.4	18	13.8

To complete the code, insert in second position:
X for **XTR** version, with **EPDM** gaskets
V for **XTR FKM** version, with **FKM** gaskets

CENTRAL TEE, MALE, ROTARY, TECHNOPOLYMER R35 XTR



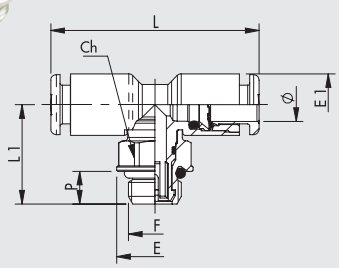

Code	Ø	F	Ch	P	L	L1	E	E1
2_T3507	6	1/8	12	6	38	18.3	14	11.3
2_T3508	6	1/4	14	8	38	21.2	18	11.3
2_T3509	8	1/8	12	6	40.4	19.5	14	13.8
2_T3510	8	1/4	14	8	40.4	22.4	18	13.8

To complete the code, insert in second position:
X for **XTR** version, with **EPDM** gaskets
V for **XTR FKM** version, with **FKM** gaskets

NOTES